Installation Instruction

Before You Begin

1. Shut off the main water supply.
2. Do not disassemble the main body, as it has been installed & commissioned correctly & precisely before leaving the factory.
3. To avoid the faucet from jamming, DO flush the water pipe before installation.
4. After installation, make sure every joint is safely sealed (NO LEAKAGE).
5. Make sure to connect the hot/cold inlet pipe correctly, if standing in front, hot water pipe connecting to the left and cold water pipe connecting to the right.
6. It is recommended that installation of the product be done by a professional plumber.

Cleaning & Maintenance

To keep product clean and shiny follow the instruction below.
1. Flush with clean water and dry with soft cloth only.
2. Do not use any detergent, polisher, sane-cloth, or a scraper.
3. Do not use acid detergent.

Installation

1.shower arm	2.cover plate	3.mounting bracket	4.hand shower	5.screen washer
6.showerhead	7.rubber washer	8.hand shower holder	9.riser	10.hose
11.rubber washer	12.diverter	13.rubber washer	14.escutcheon	15.valve body

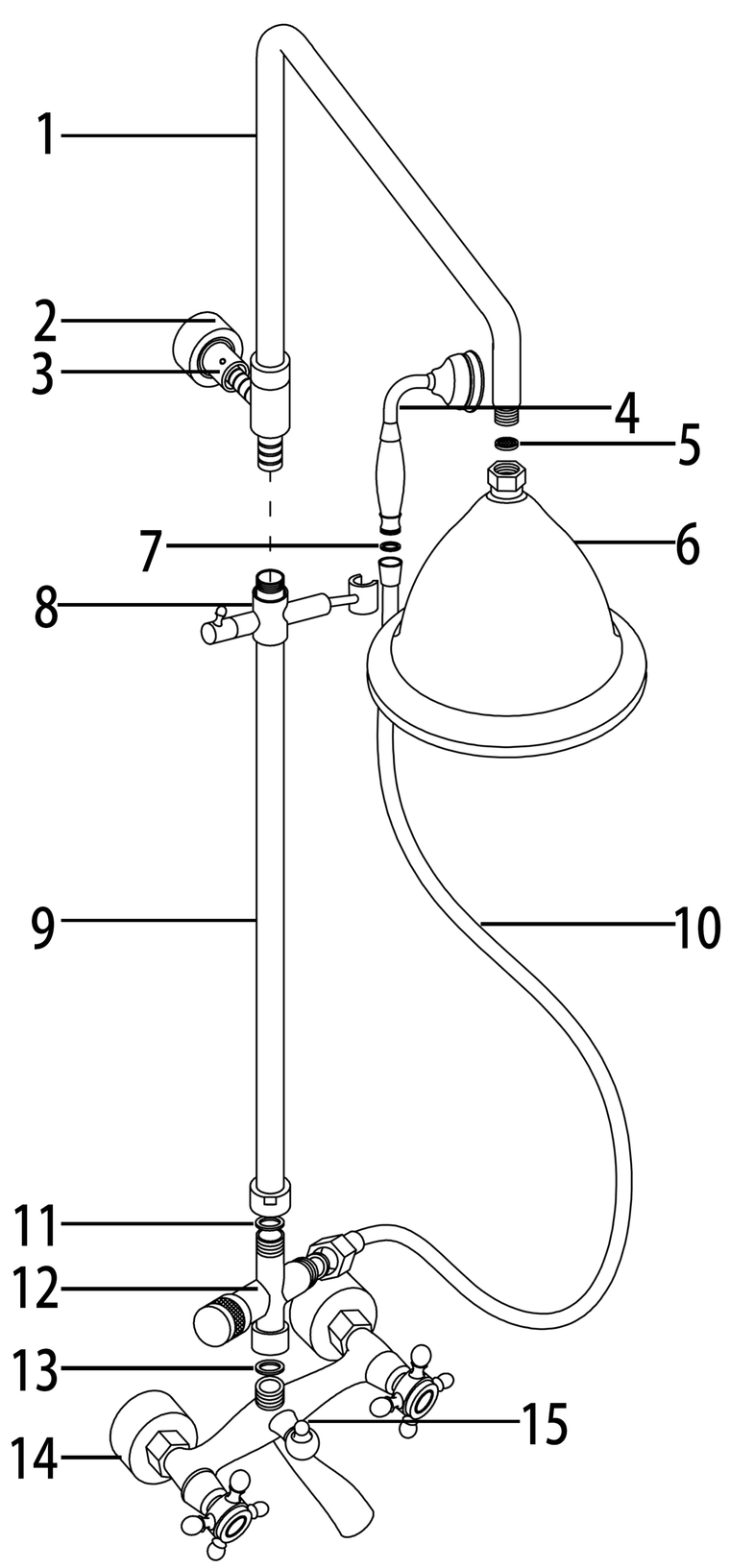

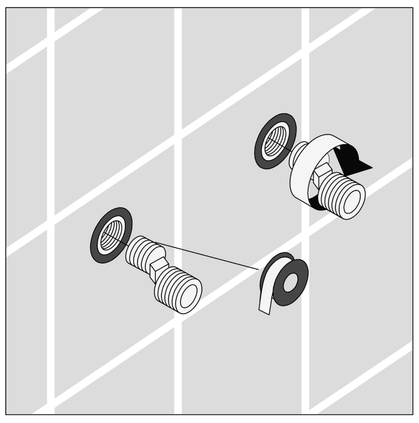

1. Wrap the threads of s-union with Teflon tape. Screw the s-unions into the female fittings of water supplies. Make sure that the s-unions are level.

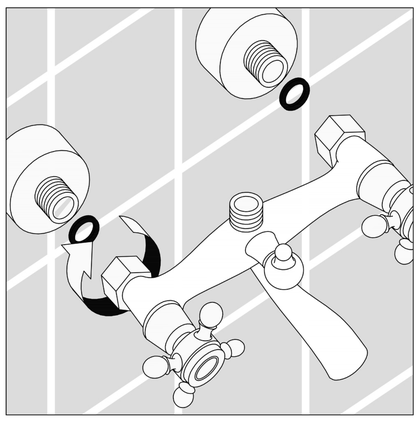

2. Install the escutcheon. Fix the washers into the inlets on the valve body. Install the connecting threads on the s-unions.

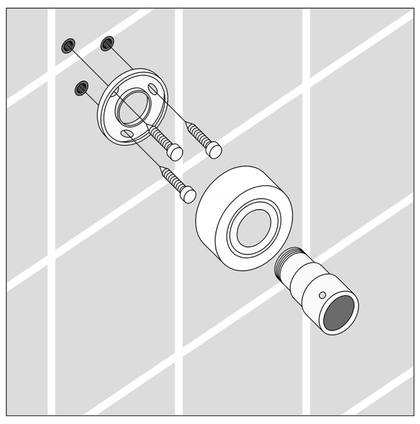

3. Drill the hole and install the anchors. Fix the mounting plate to wall with screws. Screw the mounting bracket through the cover plate into the mounting plate.

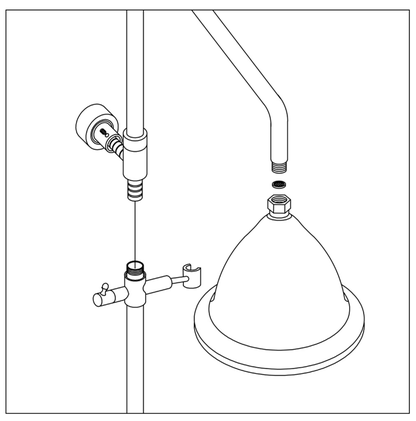

4. Put on screen washer and thread the showerhead into the shower arm. Screw the riser into the shower arm assembly. Then, locate the shower arm assembly into the mounting bracket and tighten the screw with a screwdriver.

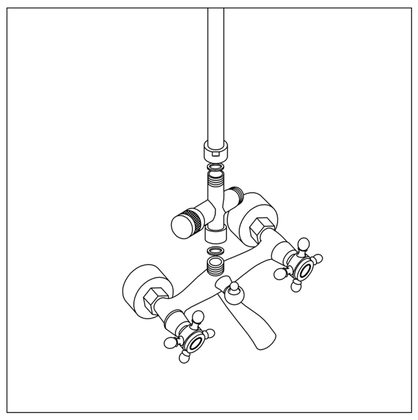

5. Add rubber washers to both ends of diverter and screw diverter into the valve outlet. Then level and fix the riser securely over the diverter outlet.

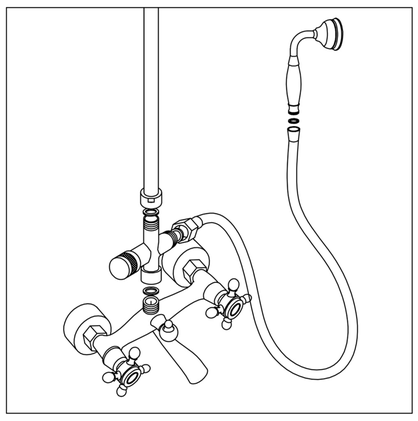

6. Install the hand shower. Place the rubber washers in both ends of the hose. Screw one end into the hand shower outlet on the diverter and the other end into the hand shower. Place the hand shower in the hand shower holder.