Installation Instruction

Before You Begin

1. Shut off the main water supply.
2. Do not disassemble the main body, as it has been installed & commissioned correctly & precisely before leaving the factory.
3. To avoid the faucet from jamming, DO flush the water pipe before installation.
4. After installation, make sure every joint is safely sealed (NO LEAKAGE).
5. Make sure to connect the hot/cold inlet pipe correctly, if standing in front, hot water pipe connecting to the left and cold water pipe connecting to the right.
6. It is recommended that installation of the product be done by a professional plumber.

Cleaning & Maintenance

To keep product clean and shiny follow the instruction below.
1. Flush with clean water and dry with soft cloth only.
2. Do not use any detergent, polisher, sane-cloth, or a scraper.
3. Do not use acid detergent.

Installation

1. shower arm	2. wall plate	3. mounting bracket	4. Allen key
5. rubber washer	6. riser	7. rubber washer	8. diverter
9. rubber washer	10. handshower	11. rubber washer	12. showerhead
13. handshower holder	14. hose	15. escutcheon	16. valve body

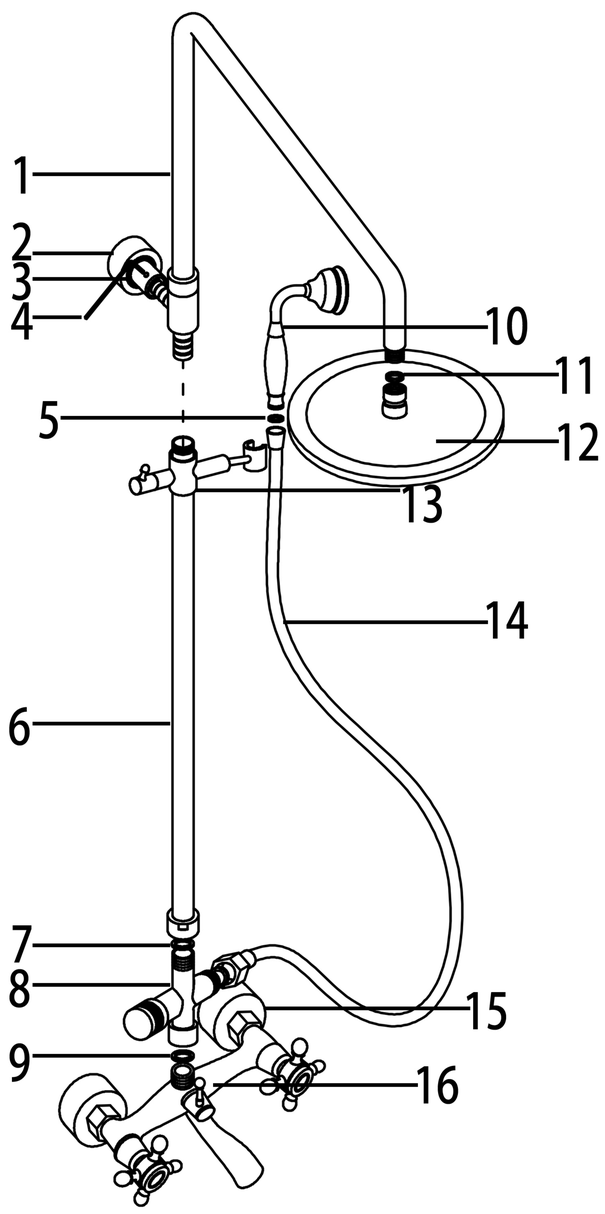

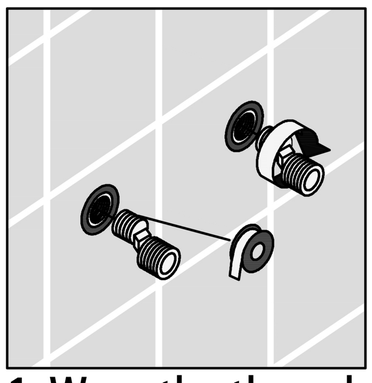

1. Wrap the threads of the s-union with teflon tape. Screw the s-unions into the female fittings of water supplies. Make sure that the s-unions are level.

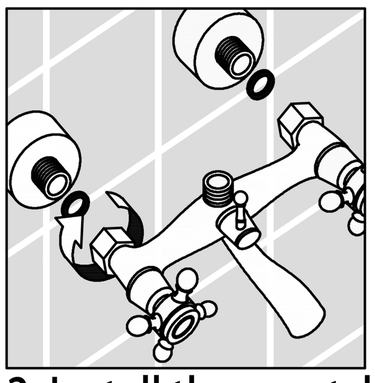

2. Install the escutcheons. Fix the washers into the inlets on the valve body. Install the connecting threads on the s-unions.

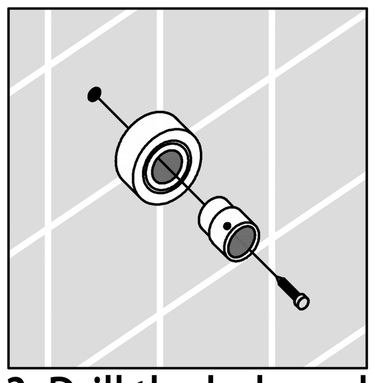

3. Drill the hole and install the anchor. Place the wall plate onto the mounting bracket and fix the screw securely into the mounting bracket and the wall.

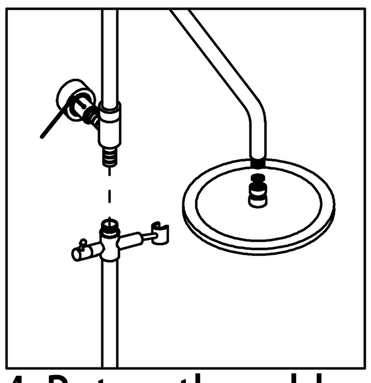

4. Put on the rubber washer and thread the showerhead into the shower arm. Screw the riser into the shower arm assembly. Then, locate the shower arm assembly into the mounting bracket and tighten the set screw with Allen Key.

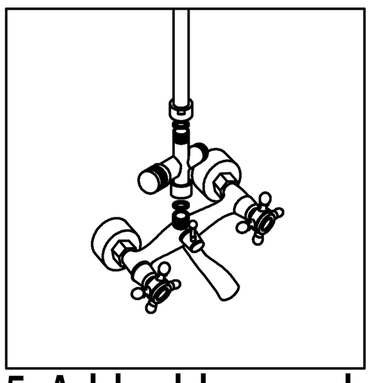

5. Add rubber washers to both ends of diverter and screw the diverter into the valve outlet. Then, level and fix the riser securely over the diverter outlet.

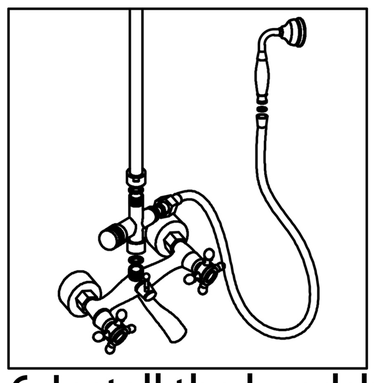

6. Install the handshower. Place rubber washers in both ends of the hose. Screw one end into the handshower outlet on the diverter and the other end to the handshower. Place the handshower in the handshower holder.