Installation Instruction

Before You Begin

1. Shut off the main water supply.
2. Do not disassemble the main body, as it has been installed & commissioned correctly & precisely before leaving the factory.
3. To avoid the faucet from jamming, DO flush the water pipe before installation.
4. After installation, make sure every joint is safely sealed (NO LEAKAGE).
5. Make sure to connect the hot/cold inlet pipe correctly, if standing in front, hot water pipe connecting to the left and cold water pipe connecting to the right.
6. It is recommended that installation of the product be done by a professional plumber.

Cleaning & Maintenance

To keep product clean and shiny follow the instruction below.
1. Flush with clean water and dry with soft cloth only.
2. Do not use any detergent, polisher, sane-cloth, or a scraper.
3. Do not use acid detergent.

Installation

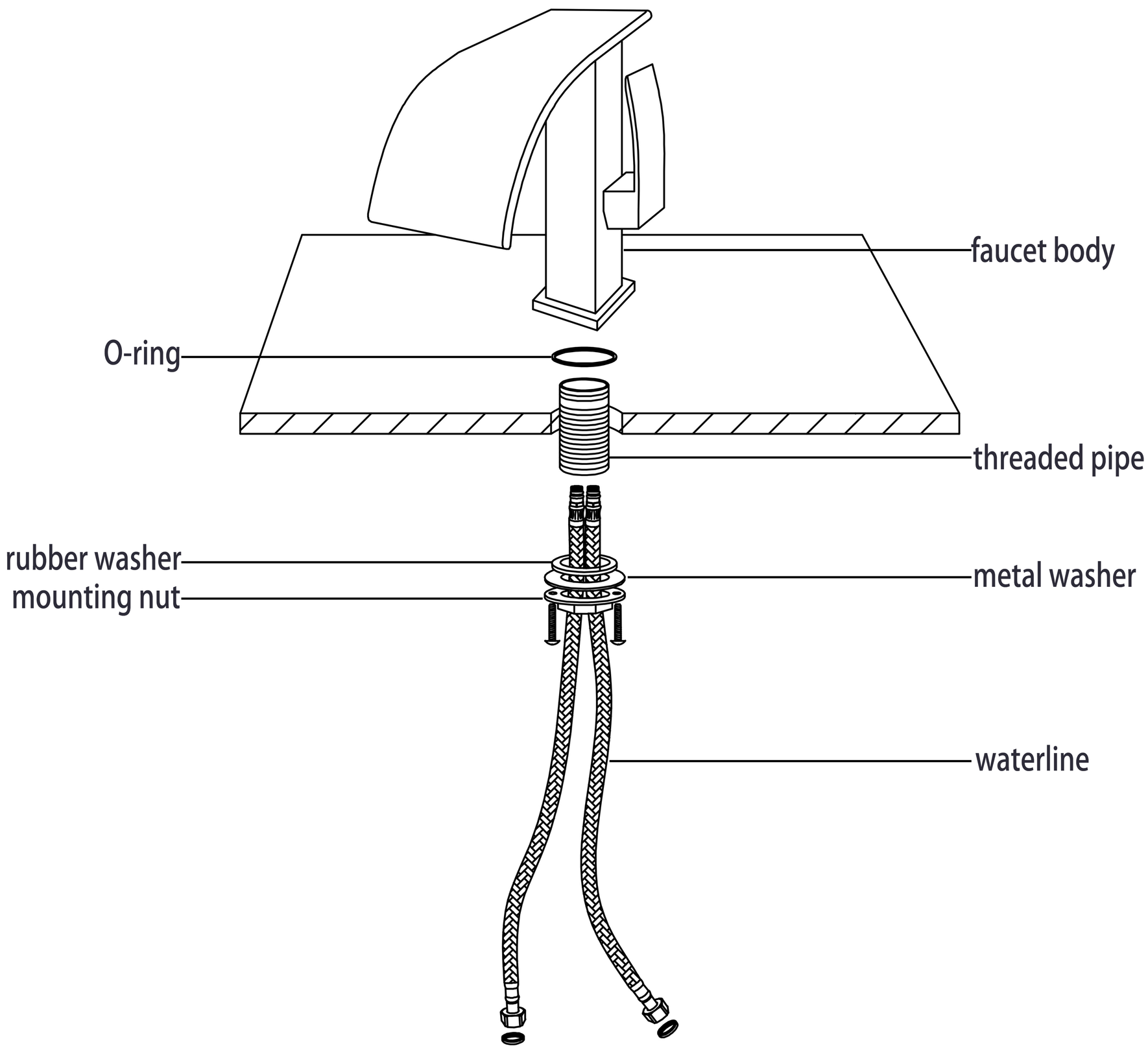

1. Screw waterlines into the corresponding screw-hole of faucet body and fit O-ring into the bottom groove of faucet body.
2. Insert waterlines and threaded pipe through the drilled hole of the countertop.
3. Put rubber washer and metal washer onto the threaded pipe, screwing in mounting nut.
4. Adjust faucet body correctly and tighten the screws with a screwdriver.