Dining Table Installation

INSTALLATION MANUAL Tools You Will Need:

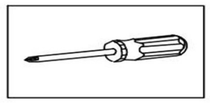

Philips Screwdriver

Before the Installation

1. Do not throw away packing materials until assembly is complete for small parts may come loose inside the carton during shipment. If parts are missing, please contact us.
2. Assemble this item on a soft surface, such as carpet to protect the finish.
3. Proper assembly of this item requires 2 people.
4. Periodically check to ensure that all connections are tight.
5. It is recommended that installation of the product be done by a qualified licensed plumber.

Care and Cleaning

1. All hot serving dishes should be placed on a pad.
2. Any liquid spilled onto the top should be cleaned up immediately with a damp

Parts List

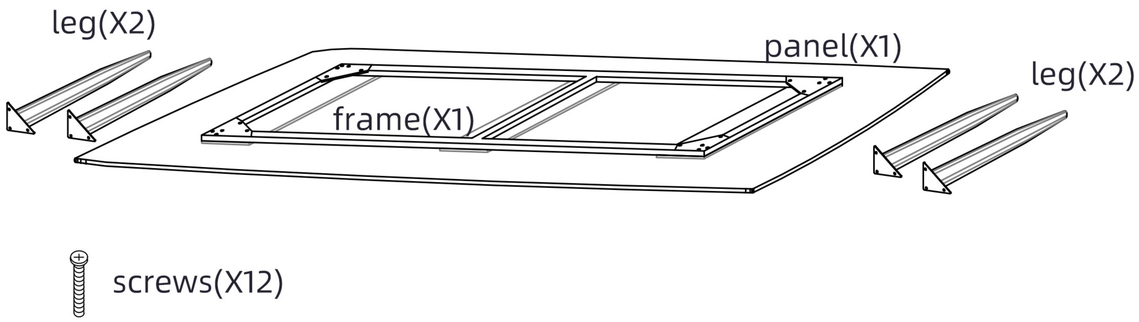

Note: Do not fully tighten all bolts until all parts are in place. Failure to follow these instructions may cause the bolt to misalign during assembly.

Installation Guide

Step 1

2.Install 4 table feet

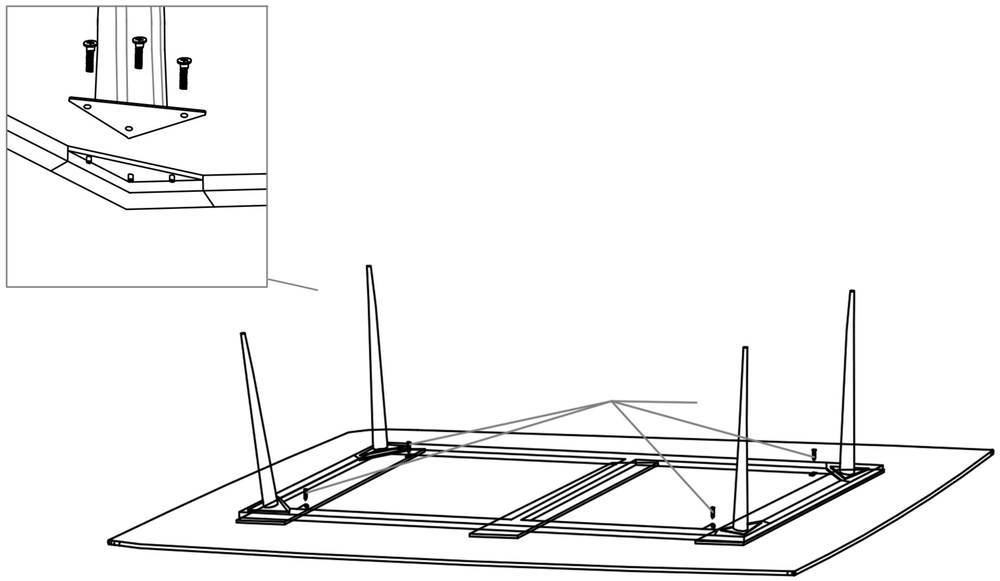

Step 2
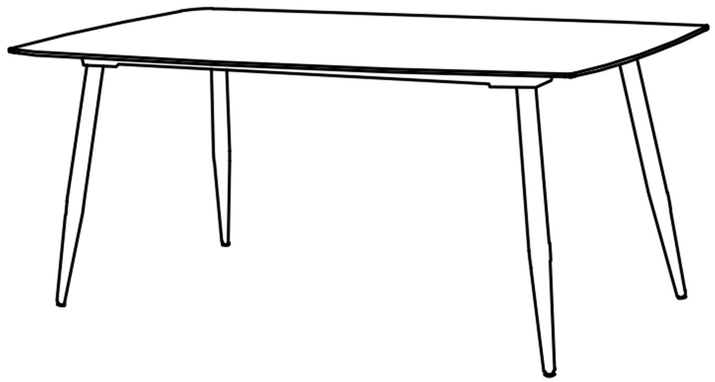
4.Installation is complete